3” ECO RECESSED DOWNLIGHT

DOWNLIGHT SERIES

PROJECT:

PREPARED BY:

DATE:

TYPE:



PERFORMANCE

• Wattage	9W	• Frequency	60Hz
• Input Voltage	120-277V	• Beam Angle	45˚
• Size	3”	• CRI	90
• Lumen	900LM	• Environment	Wet Location
• Dimming	Triac	• Certification	ETL
• LED Type	COB	• Lifetime	50,000hrs

ORDERING GUIDE

Model	Size	Wattage	Lumen	Color Temperature	Trim Finish
LB11862	3”	9W	900LM	27K/30K/35K/40K/50K 5CCT Selectable	White

Model	Description
LB15158	New Construction Plate

3" ECO RECESSED DOWNLIGHT

DOWNLIGHT SERIES

PROJECT:

PREPARED BY:

DATE:

TYPE:

DIMENSION

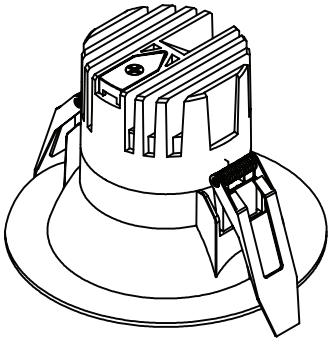

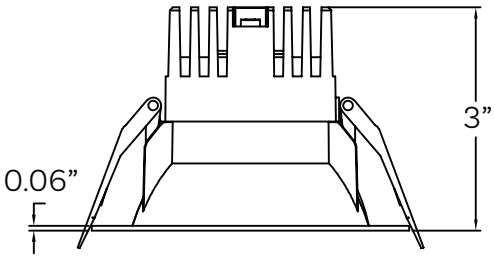

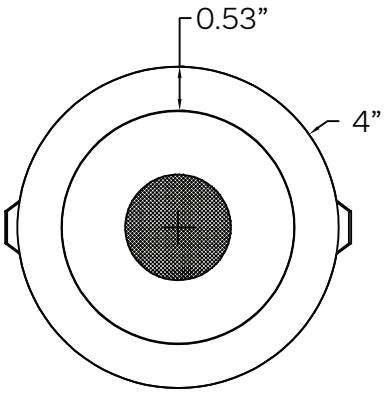

CONSTRUCTION PLATE

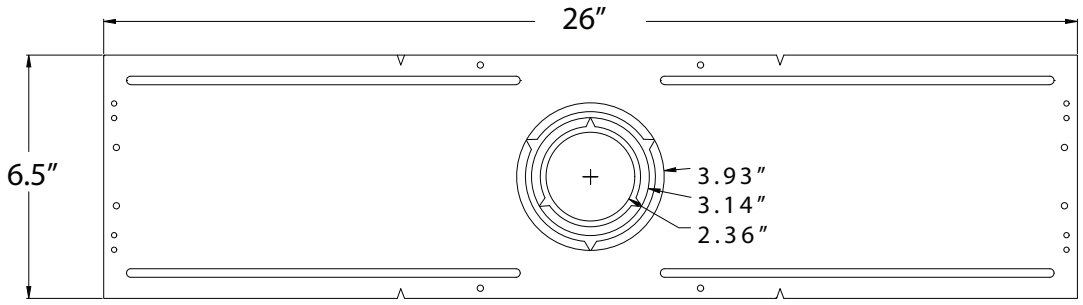

Information on Spec sheets or other supportive files may be modified at any given time